FOR OFFICIAL USE

N5

National
Qualifications
2022 MODIFIED

Mark

X835/75/01 Graphic Communication

MONDAY, 16 MAY
1:00 PM – 2:30 PM

X835750 1

Fill in these boxes and read what is printed below.

Full name of centre

Town

Forename(s)

Surname

Number of seat

Date of birth
Day Month Year

Scottish candidate number

Total marks — 65

Attempt ALL questions.

All dimensions are in mm.

All technical sketches and drawings use third angle projection.

You may use rulers, compasses or trammels for measuring.

In all questions you may use sketches and annotations to support your answer if you wish.

Write your answers clearly in the spaces provided in this booklet. Additional space for answers is provided at the end of this booklet. If you use this space you must clearly identify the question number you are attempting.

Use **blue** or **black** ink.

Before leaving the examination room you must give this booklet to the Invigilator; if you do not, you may lose all the marks for this paper.

X835750101

MARKS | DO NOT WRITE IN THIS MARGIN

Total marks — 65

Attempt ALL questions

1. The website homepage for a fitness company is shown below.

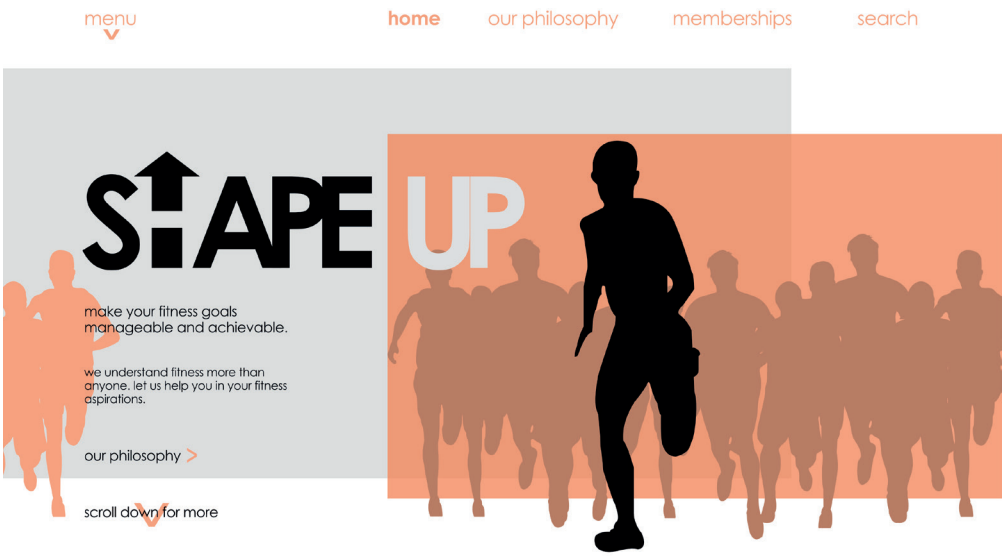

(a) Explain **two** ways the designer has successfully created a modern and simple website homepage. **2**

MARKS | DO NOT WRITE IN THIS MARGIN

1. (continued)

(b) Describe two ways the graphic designer has used each of the following design elements and principles in the layout.

You may annotate the graphic on the opposite page to support your answer.

(i) Alignment **2**

(ii) Depth **2**

(iii) Contrast **2**

(c) Explain **two** advantages to the fitness company of promoting their company online rather than in printed media. **2**

[Turn over

2. A 3D CAD illustration of a bicycle lock casing, and an orthographic drawing of Part A, are shown below.

DO NOT WRITE IN THIS MARGIN

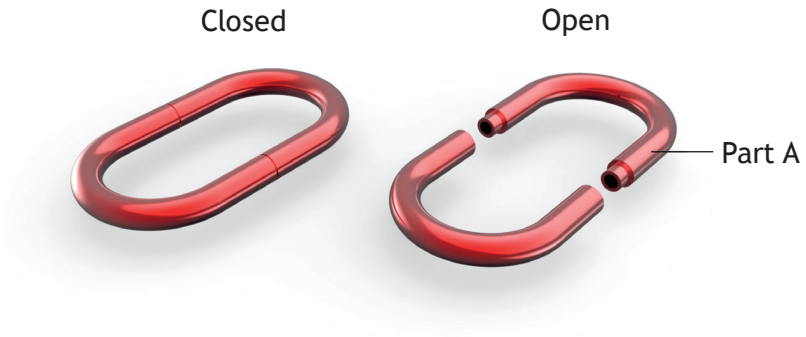

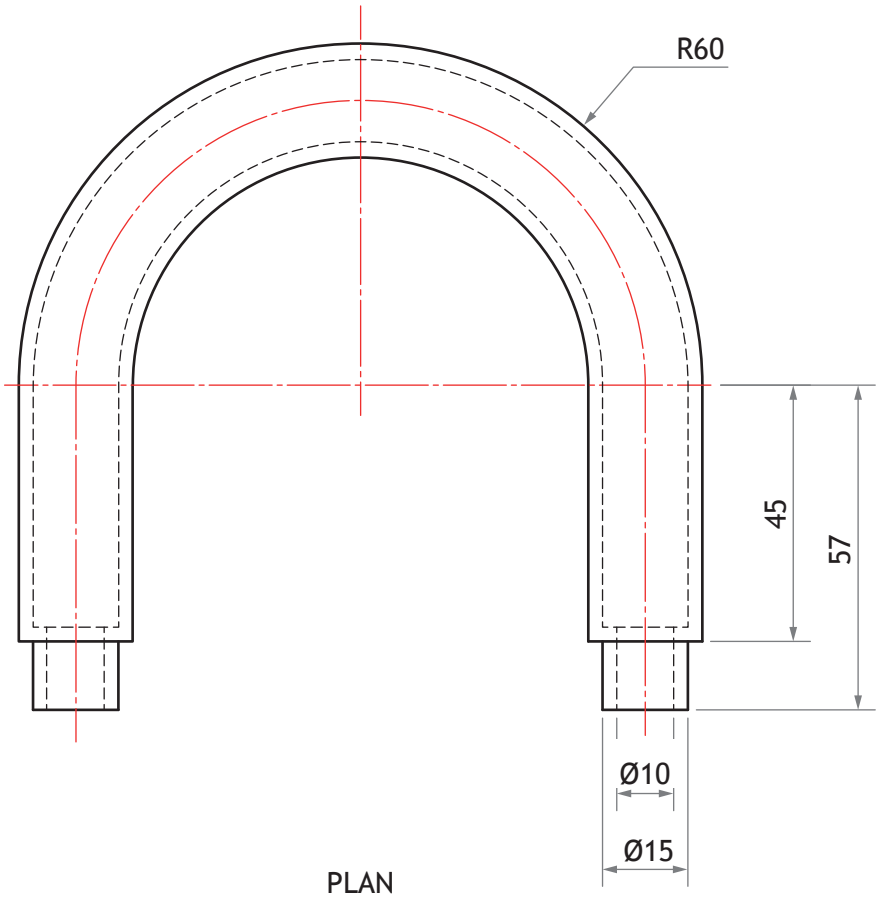

PLAN

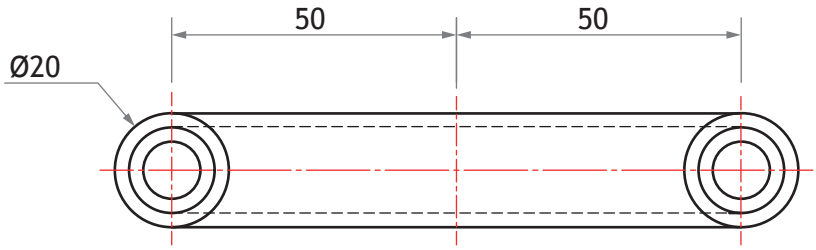

ELEVATION

MARKS | DO NOT WRITE IN THIS MARGIN

2. (continued)

(a) Describe, using the correct dimensions and 3D CAD modelling terms, how you would use 3D CAD software to model Part A.

You may use sketches to support your answer. **6**

DO NOT WRITE IN THIS MARGIN

2. (continued)

3D CAD illustrations of the bicycle lock with its packaging and a drawing of the packaging are shown.

The packaging sleeve for the bicycle lock is made from card and fits between both parts of the lock. A surface development of the packaging sleeve is shown below.

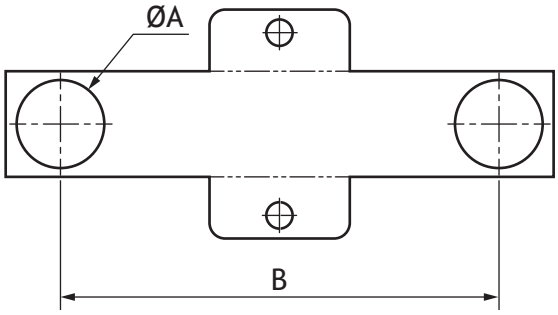

NOTE: The thickness of the card is not shown and the surface development is not to scale.

MARKS | DO NOT WRITE IN THIS MARGIN

2. (continued)

(b) Calculate the minimum dimensions on the surface development for

(i) diameter A _____ **1**

(ii) length B _____ **1**

(c) Describe how the environmental impact of manufacturing the packaging sleeve can be reduced. **1**

_____

_____

[Turn over

MARKS | DO NOT WRITE IN THIS MARGIN

3. A designer has created preliminary sketches for a ceiling-mounted display sign for an airport. The preliminary sketches are shown below.

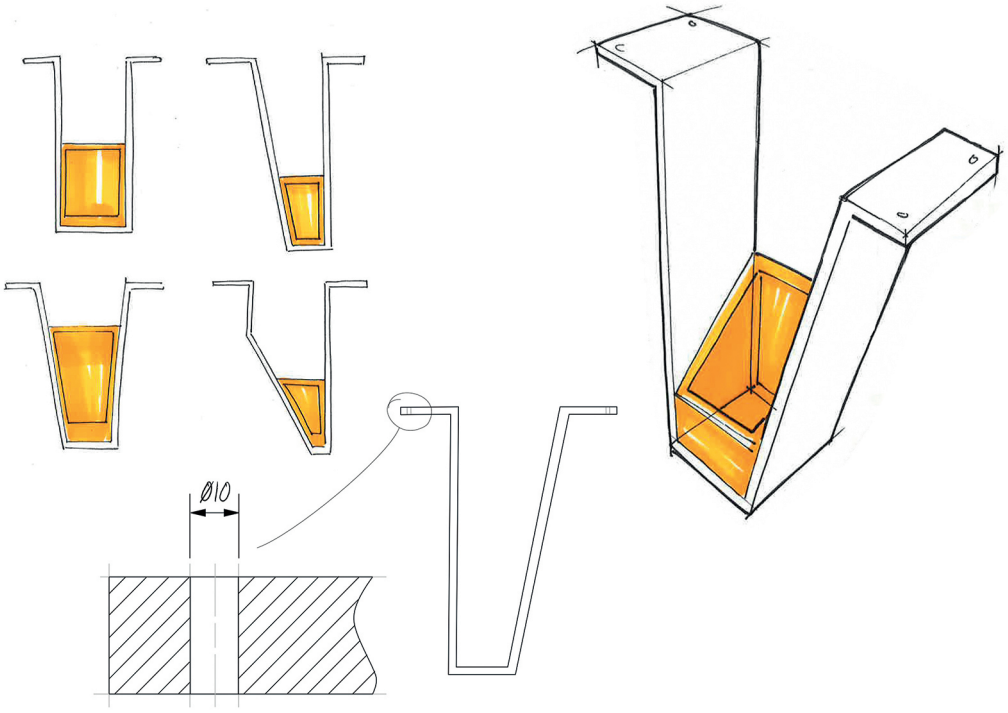

(a) Explain the purpose of preliminary sketches. **2**

(b) State **two** input devices that could be used to make a digital copy of the preliminary sketches. **2**

MARKS | DO NOT WRITE IN THIS MARGIN

3. (continued)

Two pictorial views of the display sign are shown below.

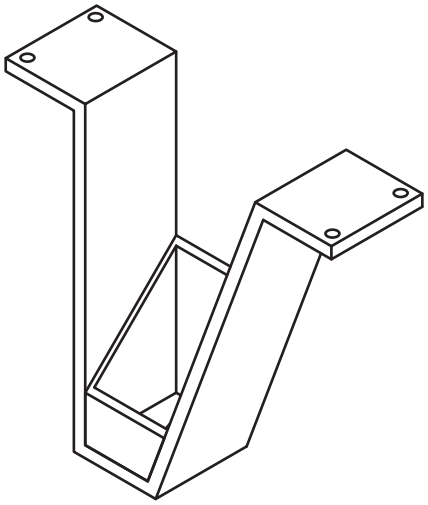

Pictorial A

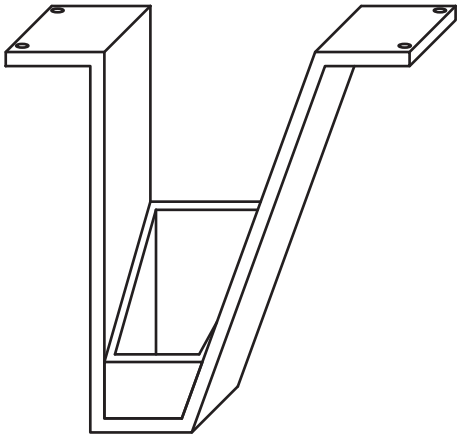

Pictorial B

(c) State the names of the pictorial views. **2**

Pictorial A _____

Pictorial B _____

[Turn over

MARKS | DO NOT WRITE IN THIS MARGIN

3. (continued)

(d) The designer used constraints to assemble both parts of the display sign.

The before and after of stage 1 of the assembly is shown below. The grey areas show the surfaces that were constrained in stage 1.

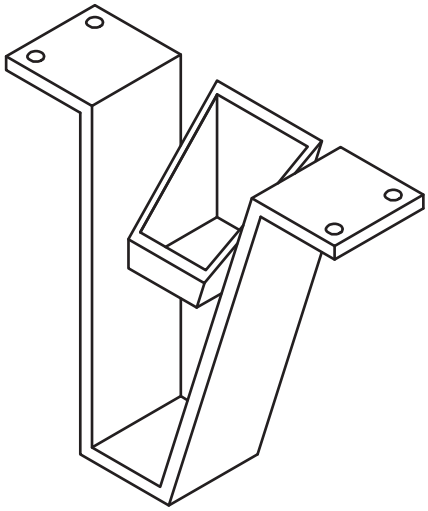

Before

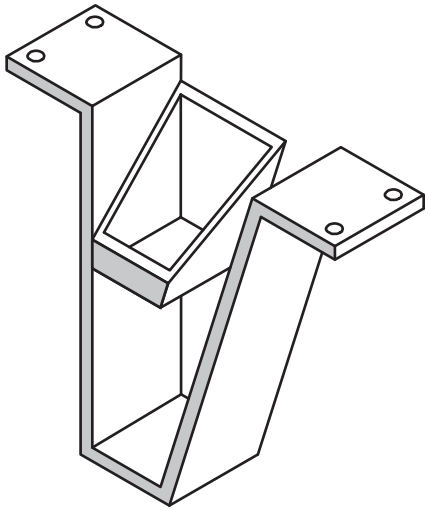

After

(i) State the name of the CAD constraint used above. **1**

_____

(ii) State the names of **two other** constraints used in 3D CAD modelling. **2**

_____

_____

(e) The designer added more parts to the assembly from a CAD library.

Explain one advantage to the designer of using a CAD library. **1**

_____

_____

[Turn over for next question

DO NOT WRITE ON THIS PAGE

DO NOT WRITE IN THIS MARGIN

3. (continued)

The finished production drawing of the assembly is shown below.

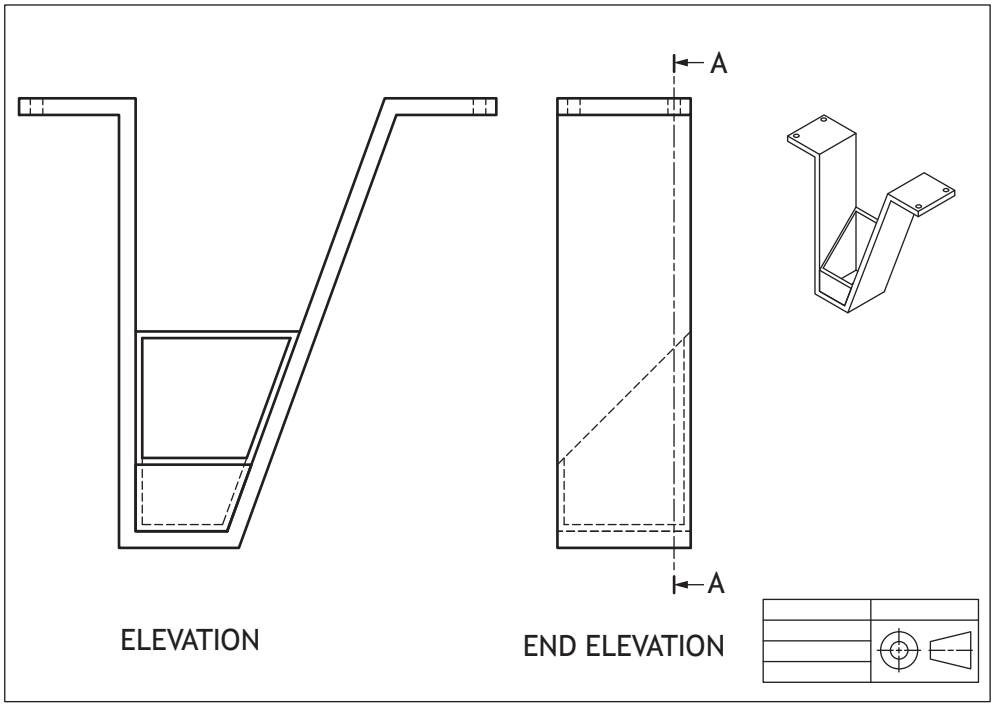

MARKS | DO NOT WRITE IN THIS MARGIN

3. (continued)

(f) Identify the correct sectional end elevation A–A from the production drawing shown opposite, by ticking (✓) a box below. **1**

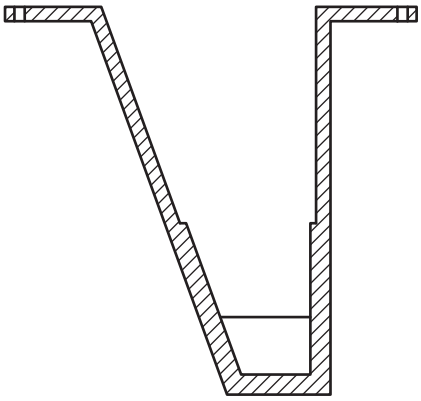

☐

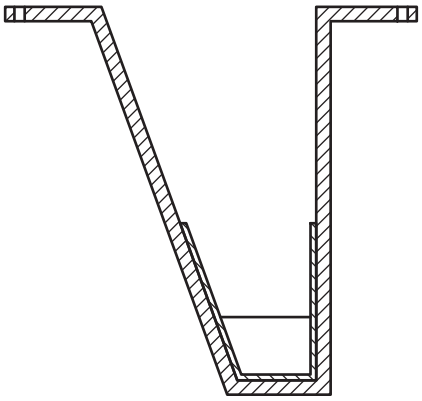

☐

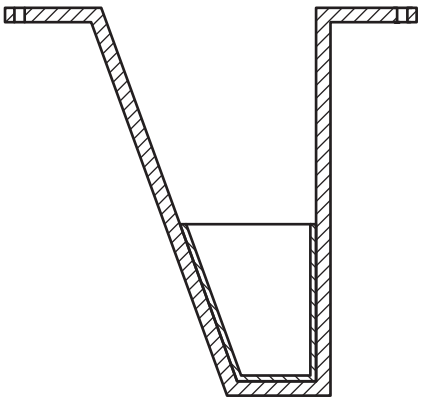

☐

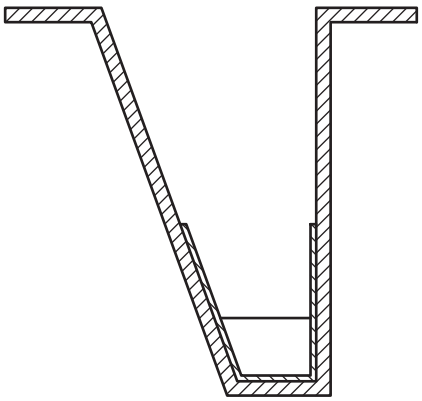

☐

[Turn over

3. (continued)

Two ideas for the airport signs are shown below.

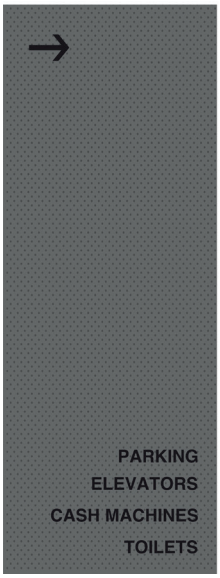

Sign 1

Sign 2

(g) Explain, giving **two** reasons, why sign 2 is more appropriate for the airport sign. **2**

[Turn over for next question

DO NOT WRITE ON THIS PAGE

DO NOT WRITE IN THIS MARGIN

4. A graphic designer has produced an instruction manual for a beehive, shown below.

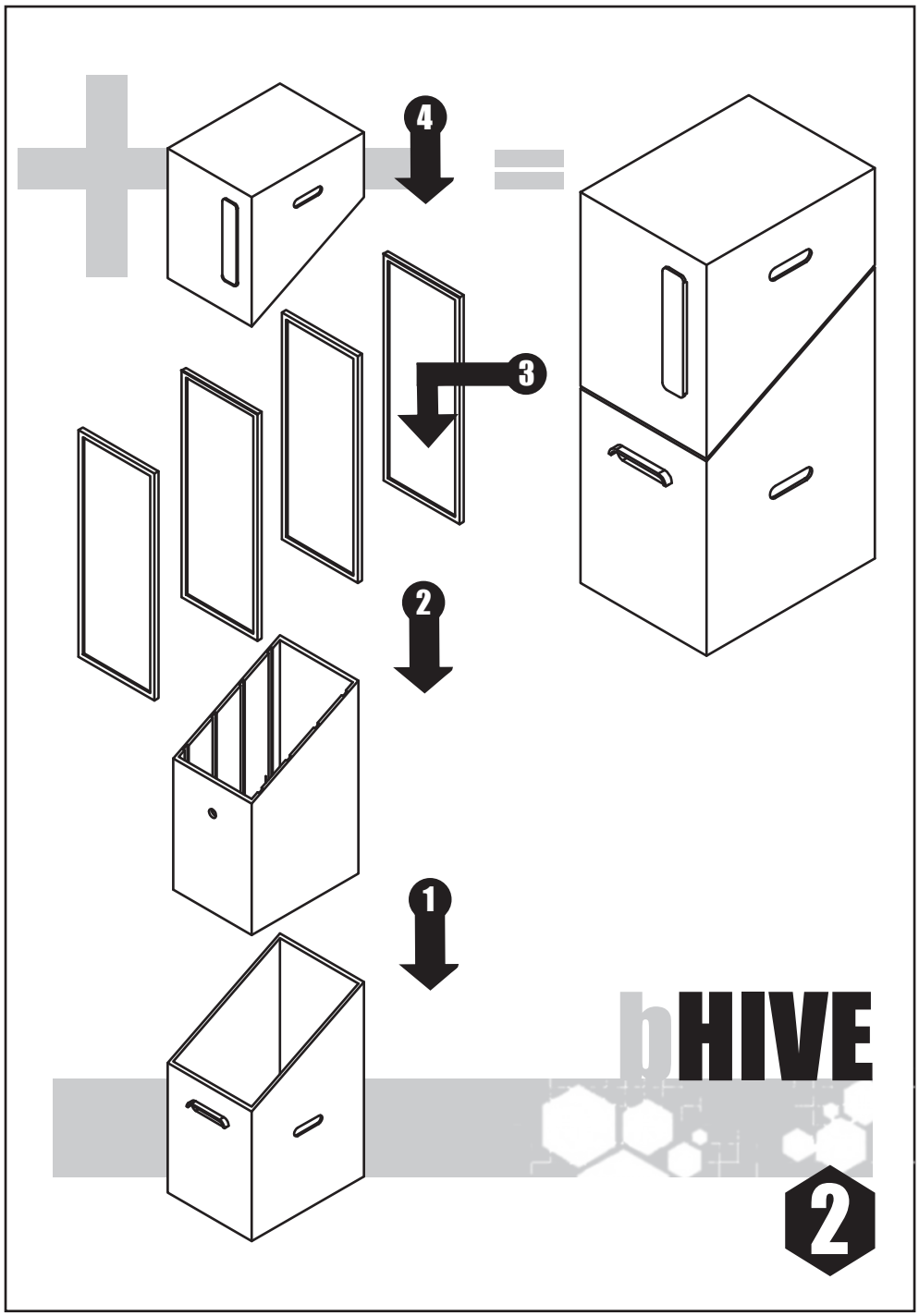

MARKS | DO NOT WRITE IN THIS MARGIN

4. (continued)

(a) Explain an **advantage** to both the user and the manufacturer of not including text within the instruction manual.

(i) User _____ **1**

_____

(ii) Manufacturer _____ **1**

_____

Before the final printing of the instruction manual several changes were made to reduce environmental impact.

(b) Describe **one** change that could be made to reduce the amount of ink used in the instruction manual opposite. **1**

_____

_____

_____

_____

[Turn over

MARKS | DO NOT WRITE IN THIS MARGIN

4. (continued)

The beehives are available in both primary and secondary colours. The lid and base are sold separately to allow customers to personalise their colour combinations.

(c) A customer wants to purchase a red lid and a contrasting base.

State the name of a suitable colour. **1**

_____

(d) A customer wants to purchase a violet base and a harmonising lid.

State the name of a suitable colour. **1**

_____

(e) A customer plans to purchase a beehive for use in a school's garden, they have selected both parts in primary colours.

(i) State the name of **two** primary colours that could be purchased. **2**

_____

_____

(ii) Explain why primary colours are suitable for a school garden. **1**

_____

_____

4. (continued)

A range of vinyl wraps are being created for the beehive.

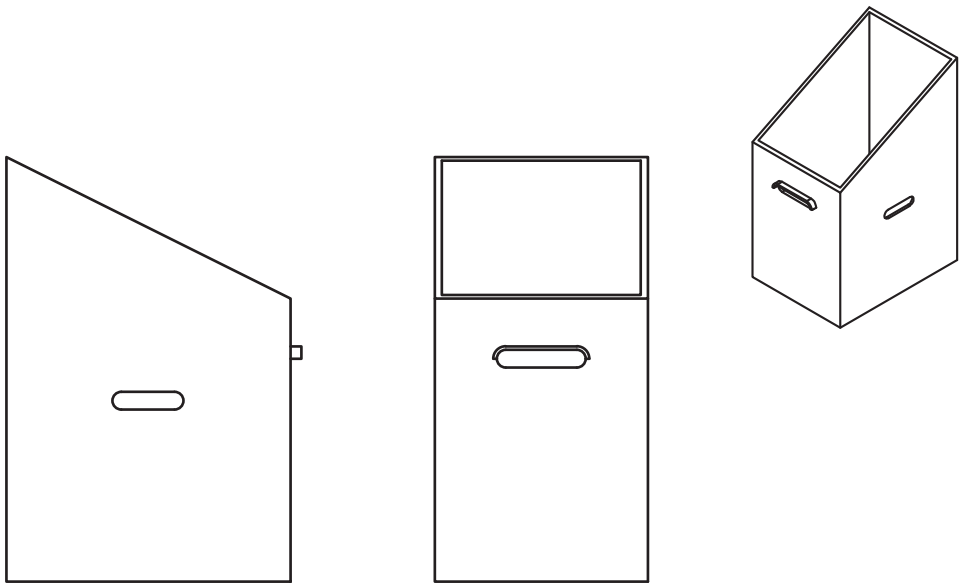

Base of beehive

(f) (i) Identify the correct surface development used to create the vinyl wrap for the base of the beehive by ticking (✓) a box below. **1**

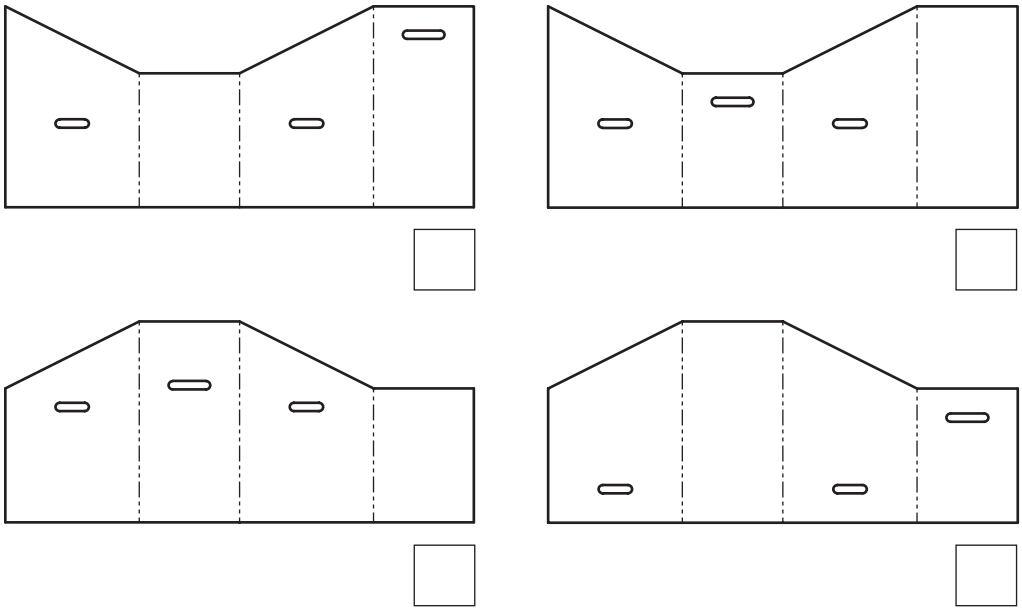

[Turn over

DO NOT WRITE IN THIS MARGIN

4. (f) (continued)

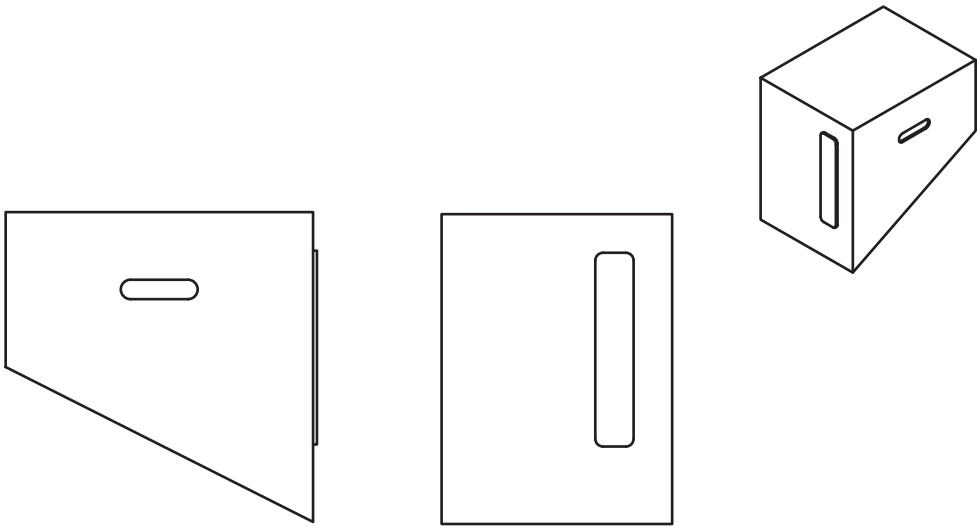

Lid of beehive

MARKS | DO NOT WRITE IN THIS MARGIN

4. (f) (continued)

(ii) Identify the correct surface development to create the vinyl wrap for the lid of the beehive by ticking (✓) a box below. **1**

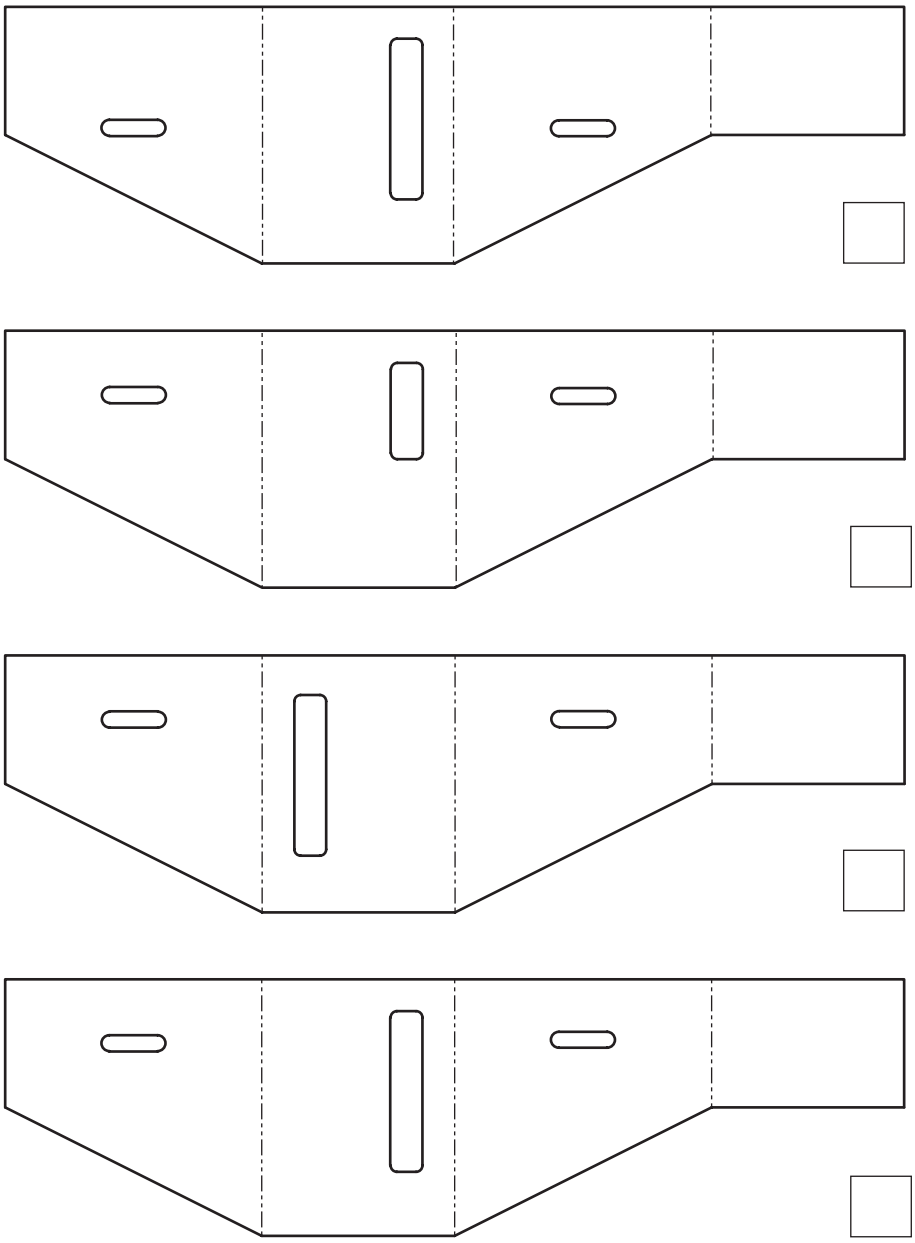

[Turn over

DO NOT WRITE IN THIS MARGIN

5. A new range of salt and pepper shakers are being developed.

A 3D CAD illustration of the salt and pepper shakers is shown below.

5. (continued)

MARKS | DO NOT WRITE IN THIS MARGIN

A series of 2D drawing tools were used when modelling the shaker.

(a) State the name of the 2D CAD drawing tool highlighted in red that is used at each stage. **3**

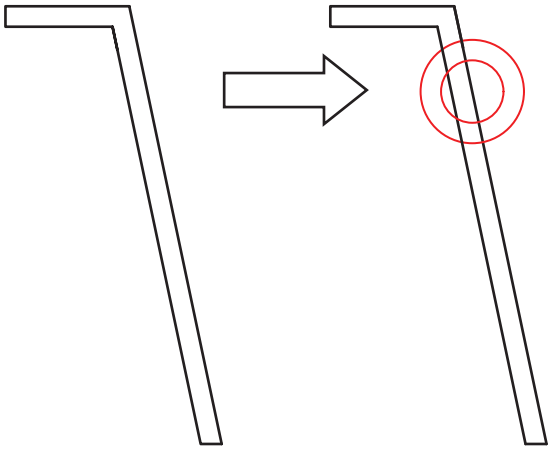

(i) tool used: _____

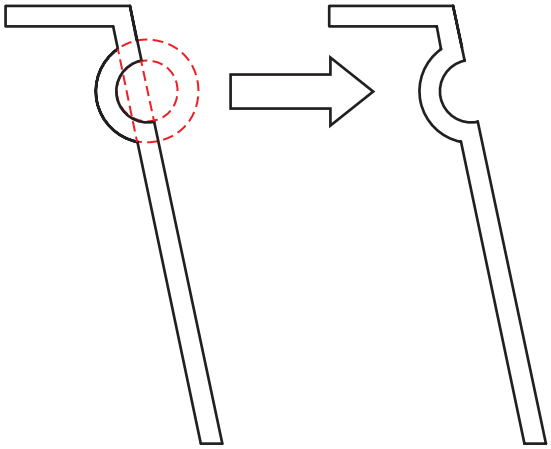

(ii) tool used: _____

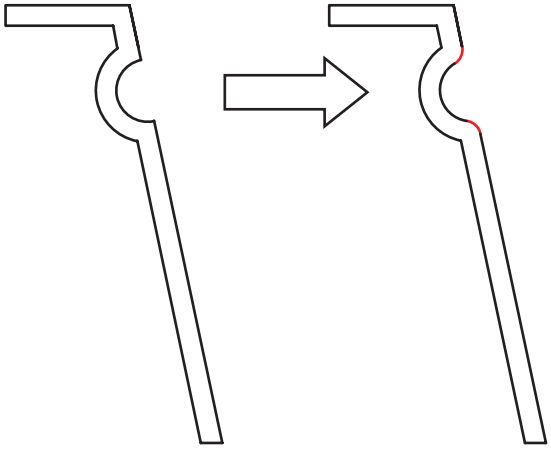

(iii) tool used: _____

5. (continued)

The base of the shaker will be made in a range of different woods. For promotional purposes the designer produced a 3D CAD illustration.

(b) State the name of the technique used to give the greyscale model the appearance of wood. **1**

(c) Describe **two** benefits of using 3D CAD models for manufacturing. **2**

The initial renders were dark, pixelated and poor quality.

(d) Describe **one** way the designer could improve the final renders. **1**

[Turn over for next question

DO NOT WRITE ON THIS PAGE

DO NOT WRITE IN THIS MARGIN

5. (continued)

Modifications were made to the base section of the shaker. A sealing ring was added to stop the two sections separating.

The designer's development sketches for the changes are shown below.

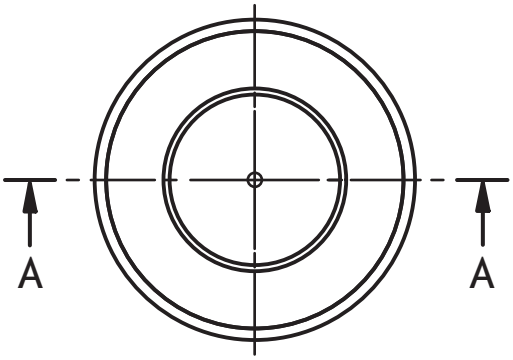

PLAN

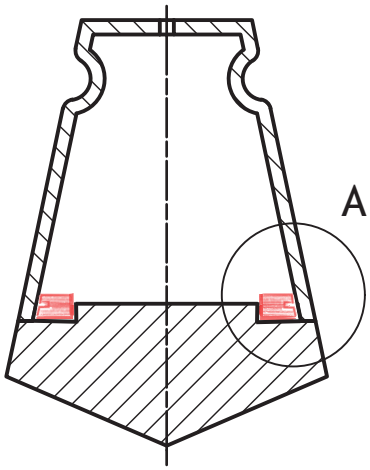

Section A–A

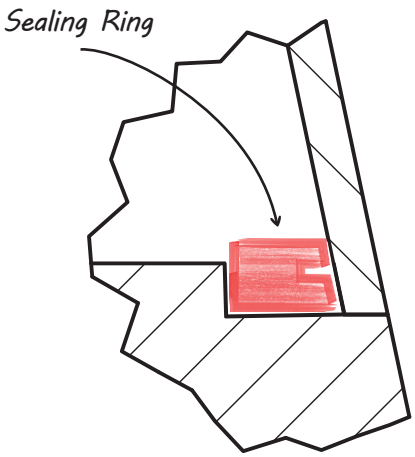

Detail A

MARKS | DO NOT WRITE IN THIS MARGIN

5. (continued)

(e) Describe, using 3D CAD modelling techniques, how the sealing ring would be modelled.

Do not refer to dimensions. You may annotate the line drawing on the opposite page and use sketches to support your answer. **3**

MARKS | DO NOT WRITE IN THIS MARGIN

6. The Scottish Space Exploration Association (SSEA) are launching a proposal for a base on Mars.

Three promotional badges have been developed for the proposal.

Badge 1

Badge 2

Badge 3

Describe one way the designer has used the following design elements and principles in any of the badges.

(a) (i) Dominance **1**

(ii) Line **1**

(iii) Unity **1**

(b) (i) State whether the font style used in the badges above is Serif or Sans Serif. **1**

(ii) Explain why this font style is a suitable choice. **1**

MARKS | DO NOT WRITE IN THIS MARGIN

6. (continued)

Detail from badge 3 is shown below.

(c) State the name of the two DTP techniques applied to the word 'expedition'. **2**

Technique 1 _____

Technique 2 _____

[Turn over

DO NOT WRITE IN THIS MARGIN

6. (continued)

It is proposed that a Mars base will be constructed using identical pods arranged in different ways.

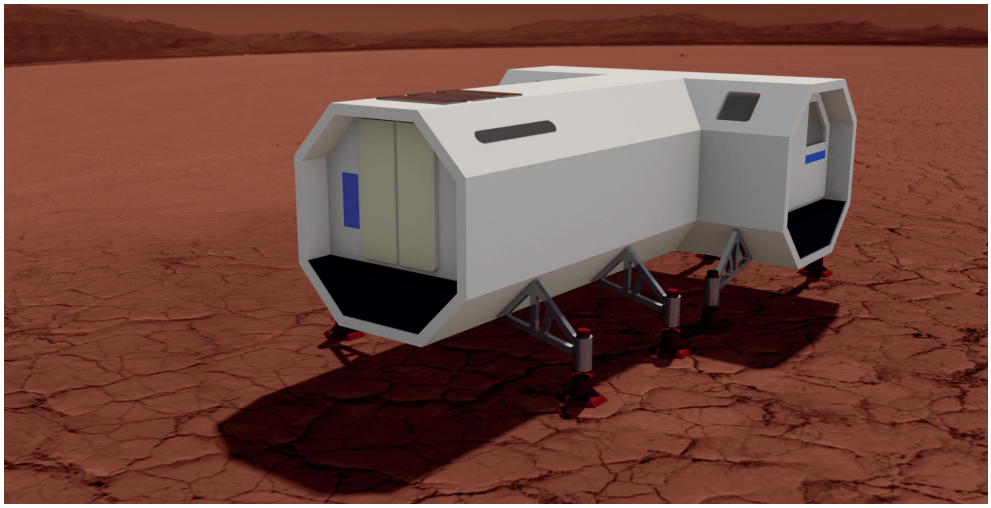

Orthographic elevations and a pictorial view of a single pod are shown below.

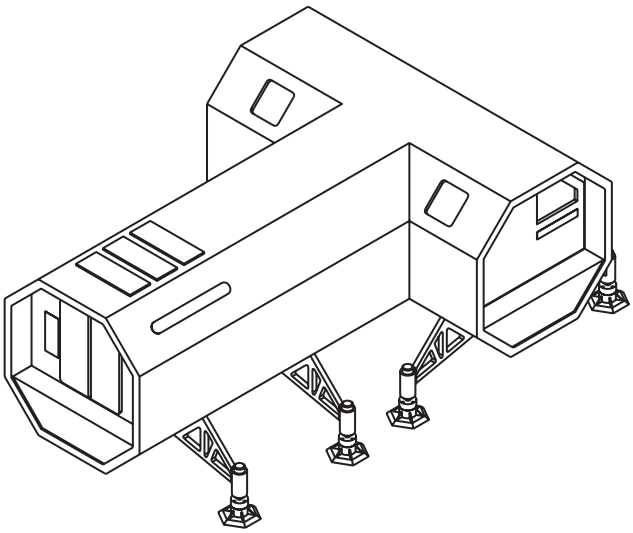

Pictorial View

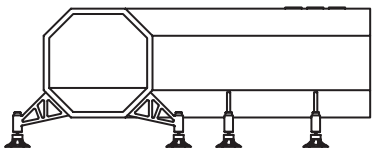

End Elevation

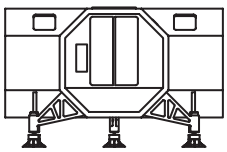

Elevation

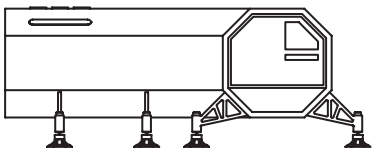

End Elevation

MARKS | DO NOT WRITE IN THIS MARGIN

6. (continued)

(d) Several arrangements are shown below. The pod legs have been removed to simplify the drawings.

Identify the two correct arrangements by ticking (✓) two boxes below. **2**

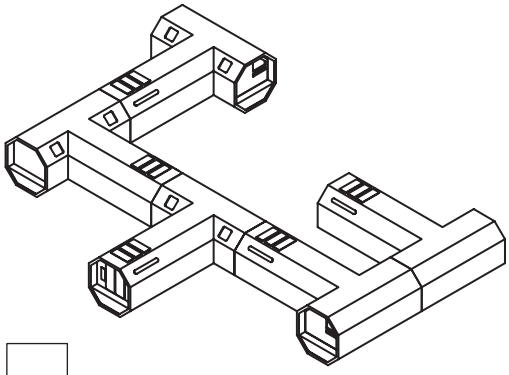

☐

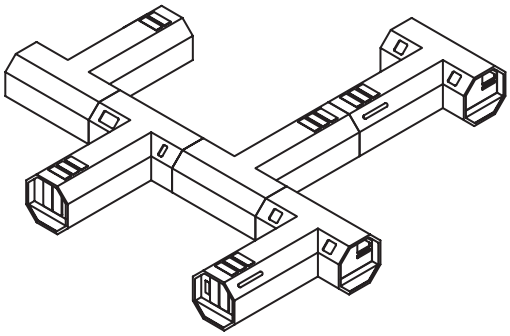

☐

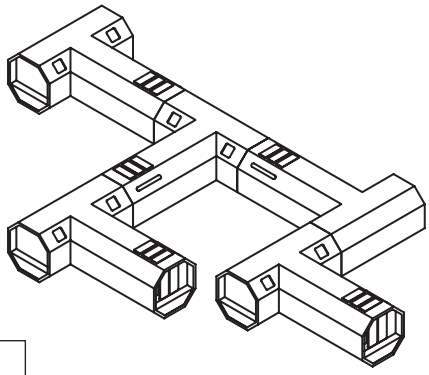

☐

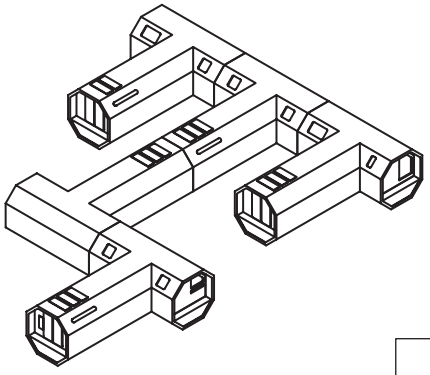

☐

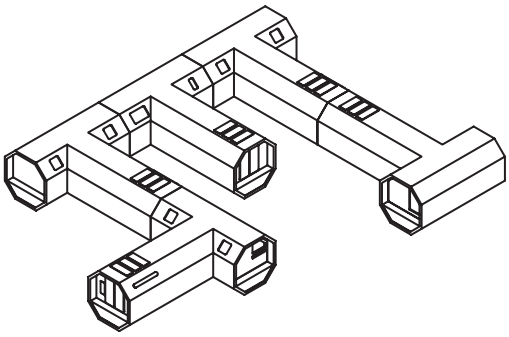

☐

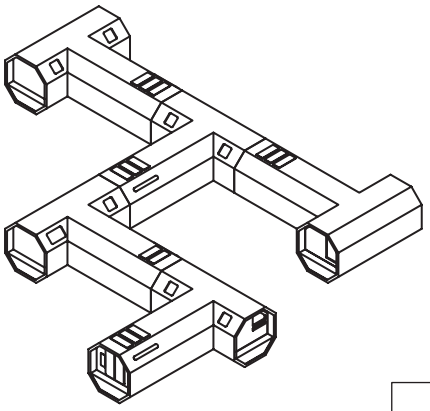

☐

[Turn over

DO NOT WRITE IN THIS MARGIN

6. (continued)

(e) An exploded pictorial of a pod leg is shown below.

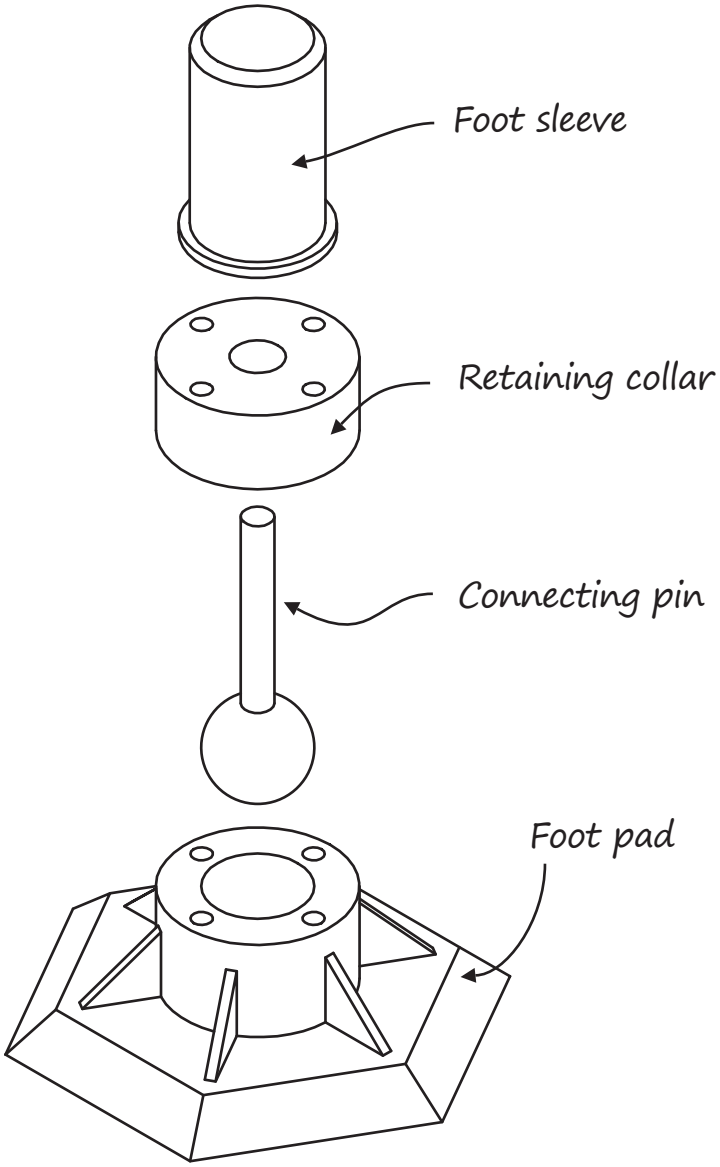

MARKS | DO NOT WRITE IN THIS MARGIN

6. (e) (continued)

Identify the foot sleeve, retaining collar, connecting pin and foot pad by labelling the sectional elevation. **4**

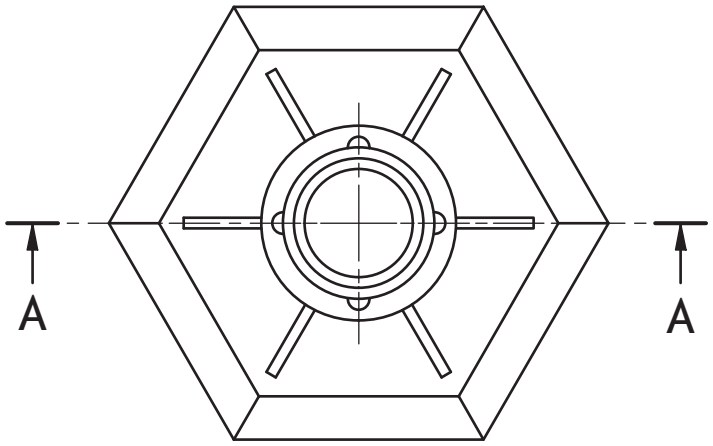

NOTE:
Centre lines removed for clarity

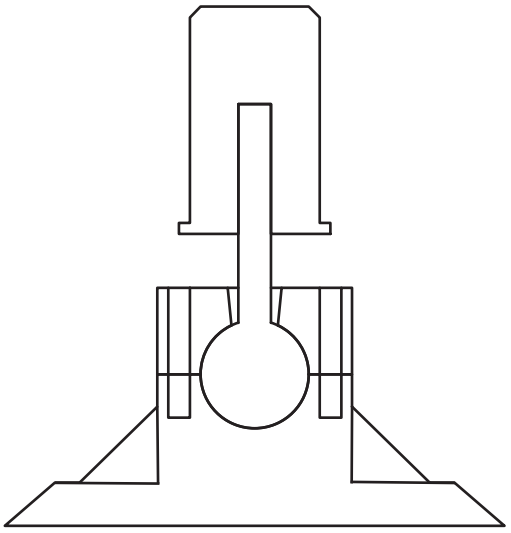

Sectional Elevation A–A

[END OF QUESTION PAPER]

MARKS | DO NOT WRITE IN THIS MARGIN

ADDITIONAL SPACE FOR ANSWERS

X835750134

MARKS | DO NOT WRITE IN THIS MARGIN

ADDITIONAL SPACE FOR ANSWERS

X835750135

[BLANK PAGE]

DO NOT WRITE ON THIS PAGE